# TECAPRES®

**Ø195mm**
**20000daN**

# TPSP 20000

VDI SAFETY

PED 2014/68/UE — ISO POWER

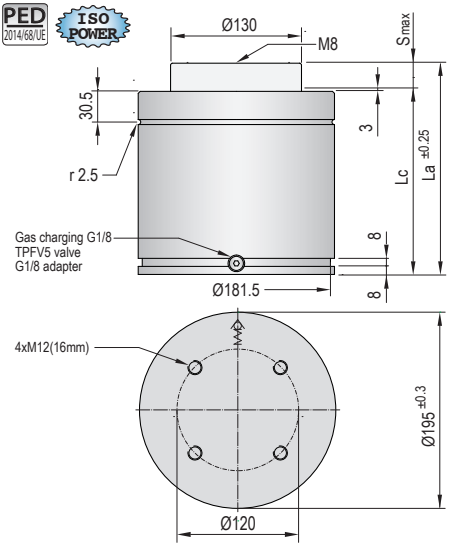


| | |
|---|---|
| Pressure medium | Nitrogen ($N_2$) |
| Max. charging pressure | 150 Bar |
| Min. charging pressure | 35 Bar |
| Rod seal area | 132,73 $cm^2$ |
| Operating temperature | 0ºC - 80ºC |
| Force increase by temperature | 0,33 %/ºC |
| Max. stem speed | 1 m/s |
| Maintenance kit | Kit SP20000 |

Maximum strokes / minute (at 20ºC)

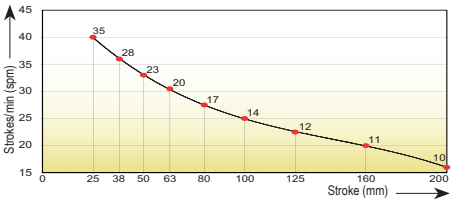


| Code | Smax mm | La mm | Lc mm | Fa daN | 90% F daN | 100% Fc daN | P Bar | V l | Kg |
|---|---|---|---|---|---|---|---|---|---|
| **TPSP 20000x25** | 25 | 210 | 185 | 20000 ±5% (20ºC) | 26865 | 27950 | 150 (20ºC) | 1,154 | 31,8 |
| **TPSP 20000x38** | 38 | 236 | 198 | | 27990 | 29310 | | 1,573 | 32,3 |
| **TPSP 20000x50** | 50 | 260 | 210 | | 29165 | 30755 | | 1,882 | 34,25 |
| **TPSP 20000x63** | 63 | 286 | 223 | | 30140 | 31965 | | 2,217 | 35,37 |
| **TPSP 20000x80** | 80 | 320 | 240 | | 31105 | 33175 | | 2,655 | 38,09 |
| **TPSP 20000x100** | 100 | 360 | 260 | | 31945 | 34245 | | 3,171 | 39,15 |
| **TPSP 20000x125** | 125 | 410 | 285 | | 32710 | 35230 | | 3,816 | 42,75 |
| **TPSP 20000x160** | 160 | 480 | 320 | | 39105 | 43795 | | 3,894 | 45,91 |
| **TPSP 20000x200** | 200 | 560 | 360 | | 39670 | 44585 | | 4,797 | 51,33 |

Force/stroke ratio

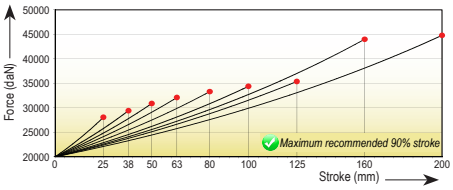


Initial force/charging pressure ratio

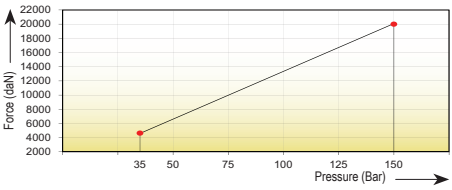


Assembly possibilities

Follow guidelines
Page 287

DROP-IN

SCREWS

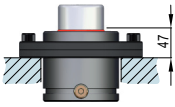


FSC 195

FP 195

FB 195